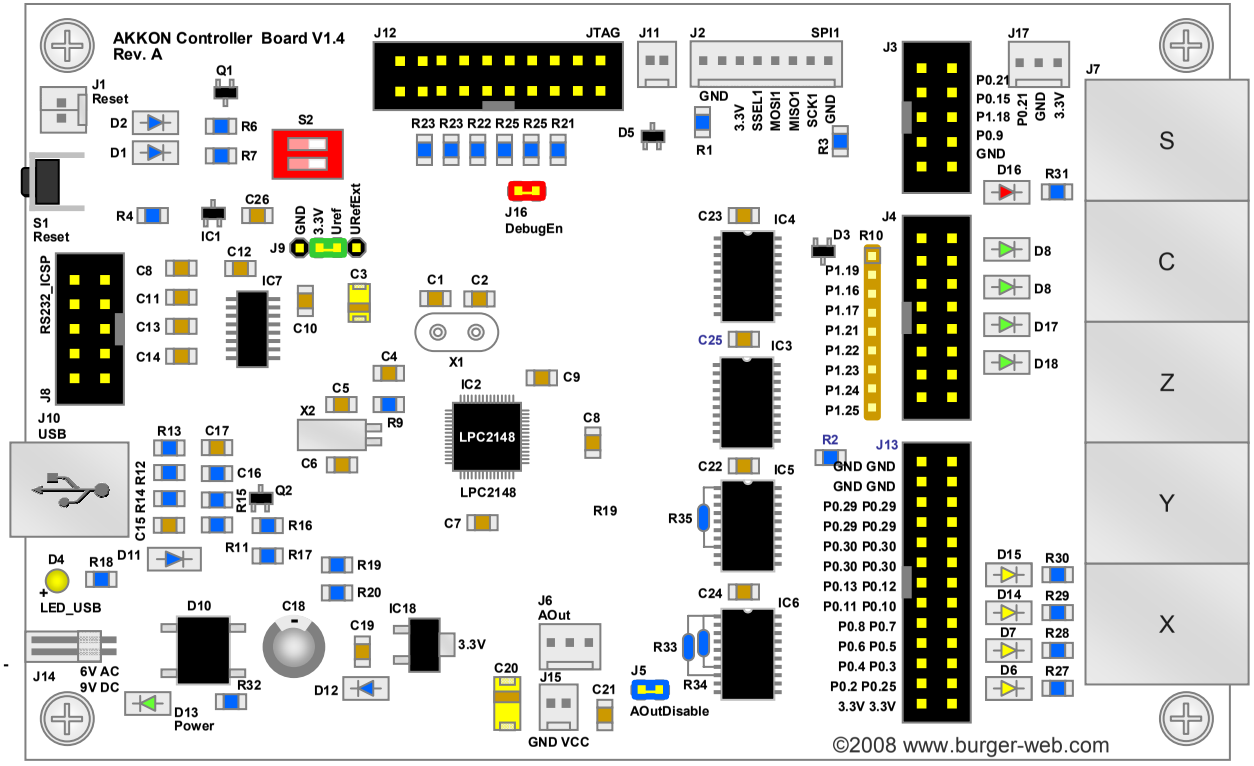AKKON Controller Board